Transmission and Distribution of Electrical Power

By

Associate Prof. / Mohamed Ahmed Ebrahim Mohamed

E-mail: mohamedahmed_en@yahoo.com

mohamed.mohamed@feng.bu.edu.eg

Web site: http://bu.edu.eg/staff/mohamedmohamed033

Lecture (6)

Associate Prof. Dr . Mohamed Ahmed Ebrahim

Chapter 4:
D.C. Power Transmission Technology

Introduction

- The industrial growth of a nation requires increased consumption of energy, particularly electrical energy.
- This has led to increase in the generation and transmission facilities to meet the increasing demand.
- System interconnections lead to a search for efficient power transmission at increasing power levels.
- The increase of voltage levels is not always feasible.
- The problems of AC transmission particularly in long distance transmission has led to the development of DC transmission.

Continue

- However, as generation and utilization of power remain at alternating current the DC transmission requires conversion at two ends from AC to DC at the S.E. and back to AC at the R.E.
- This conversion is done at converter stations – rectifier station at the S.E. and inverter station at the R.E.

Continue

- The converters are static – using high power thyristors connected in series to give the required voltage ratings.
- The physical process of conversion in such that the same station can switch from rectifier to inverter by simple control action, thus facilitating power reversal.

Comparisons of AC and DC Transmission

The comparison between the two modes of transmission (AC & DC) which need to be considered by a system planner are based on the following factors:

1. Economics of Transmission.
2. Technical performance.
3. Reliability.

Economics of Power Transmission

Cost of Transmission Line

- **Investment**
  - **Cost of Right of Way +**
  - **Transmission towers +**
  - **Conductors +**
  - **Insulators +**
  - **Terminal equipment**
- **Operational Costs**
  - **Cost of Losses**

This implies that for a given power level, DC line requires – less (Row) & simple-cheaper towers – and reduced conductor and insulator costs.

Continue

The power losses are also reduced with DC, as there are only two conductors. That absence of skin effect with DC is also beneficial in reducing power losses marginally. Also the dielectric losses in case of power cables is also very less for DC transmission.

Technical Performance

The DC transmission has some positive features, which are lacking in AC transmission. These are mainly due to the fast controllability of power in DC lines through converter control. The following are the advantages;

a) Full control over power transmitted.

b) The ability to enhance transient and dynamic stability in associated AC network.

c) Fast control to limit fault currents in DC lines. This makes it feasible to avoid DC breakers in two terminals DC link.

Also DC overcomes some of problems of AC transmission:

Continue

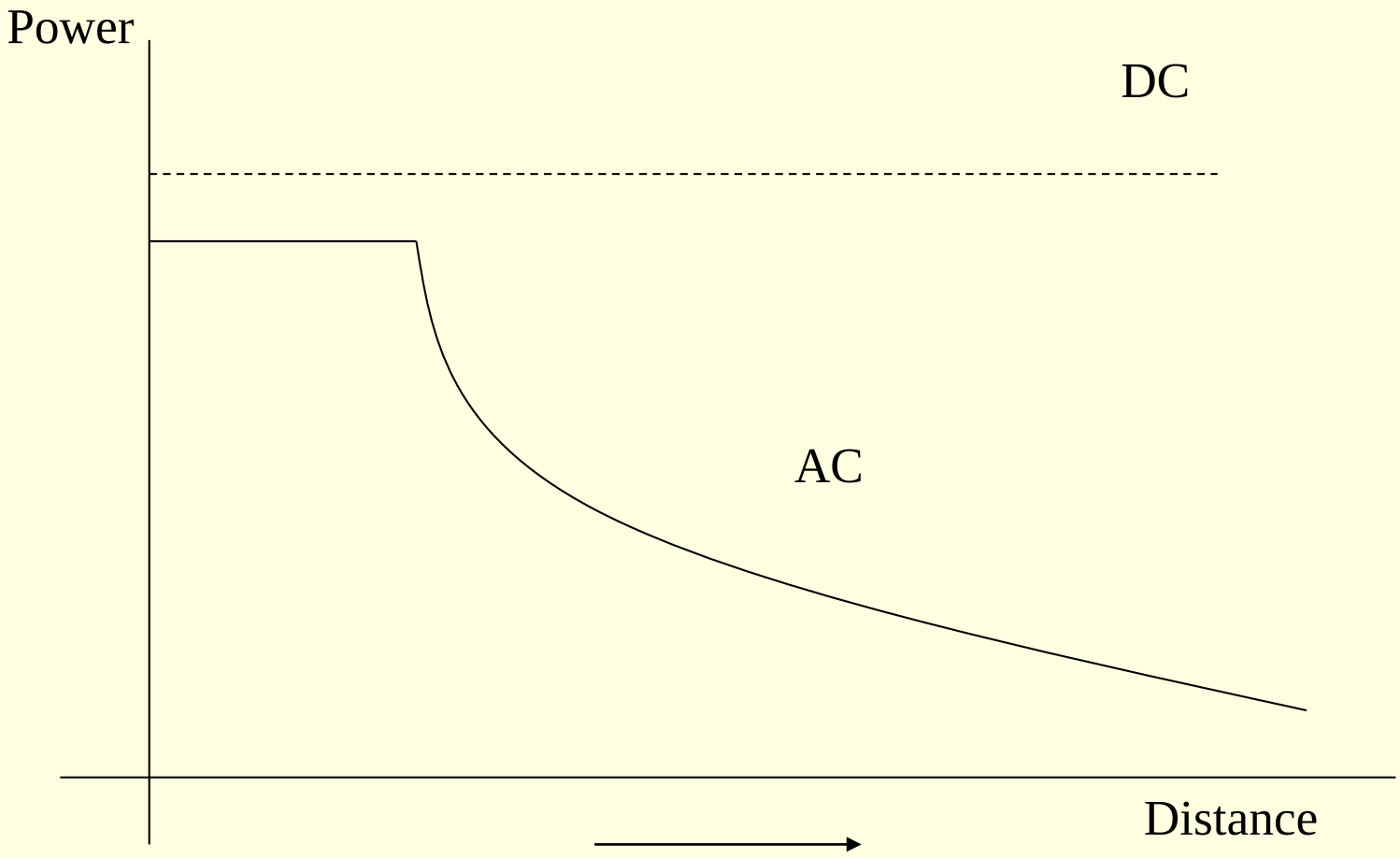

Continue

(a) Stability Limit:

The power transfer in AC is dependent on (the Voltage and current at both sending and receiving ends.) as the distance increases, the angle increases, and the power transfer decrease.

Figure 4.1 shows the power carrying capability of DC lines which is unaffected by the distance of transmission.

Continue

(b) Voltage Control:

The reactive power requirements increase with the increase in line length (AC). Although DC converter stations require reactive power, related to the line loading, the line itself dose not require reactive power.

Continue

(C) Line Compensation:

AC line requires shunt and series compensation in long distance transmission, mainly to overcome problems of line charging and stability limitations. Series capacitors and shunt inductors are used for this purpose.

Continue

(d) Problems of AC interconnection:

When two power systems are connected through AC ties, the automatic generation Controls of both systems have to be coordinated using tie line power and frequency signals. Even with coordinated control of interconnected systems, the operation of AC ties can be problematic due to:

1) The presence of large power oscillations, which can lead to frequent tripping.

Continue

2) Increase in fault level.

3) Transmission of disturbances from one system to the other.

The controllability of power flow in DC lines eliminates all the above problems. In addition, for asynchronous ties, there is no need of coordinated control.

Disadvantages of DC transmission

1. The difficulty of breaking DC currents, which results in high cost of DC breakers.
2. Inability to use transformers to change voltage levels.
3. High cost of conversion equipment.
4. Generation of harmonics, which require AC & DC, filters, adding to the cost of converter stations.
5. Complexity of control.

Reliability

The reliability of DC transmission systems is quite good and comparable to that of AC systems.

An exhaustive record of existing HVDC links in the world is available from which the reliability statistics can be computed.

It must be remembered that developments in devices, control and protection is likely to improve the reliability level.

There are two measures of overall system reliability – energy availability and transient reliability.

Continue

(a) Energy availability:

$$Energy\ availability = 100\left(1 - \frac{equivalent\ outage}{total\ time}\right) \times 100$$

(b) Transient reliability

This is a factor specifying the performance of HVDC systems during recordable faults on the associated AC systems

$$TR = \frac{100 \times \text{No. of times HVDC systems performed as designed}}{\text{No. of recordable AC faults}}$$

Application of DC Transmission

1. Long distance bulk power transmission.
2. Underground or underwater cables.
3. A synchronous interconnection of AC systems operating at different frequencies or where independent control of systems is designed.
4. Control and stabilization of power flows in AC ties in integrated power system.

Description of Transmission System

Types of DC Links

(a) Monopolar: It has one conductor of – v polarity and uses ground or sea return.

(b) Bipolar: It has two conductors one + ve and the other – ve.,

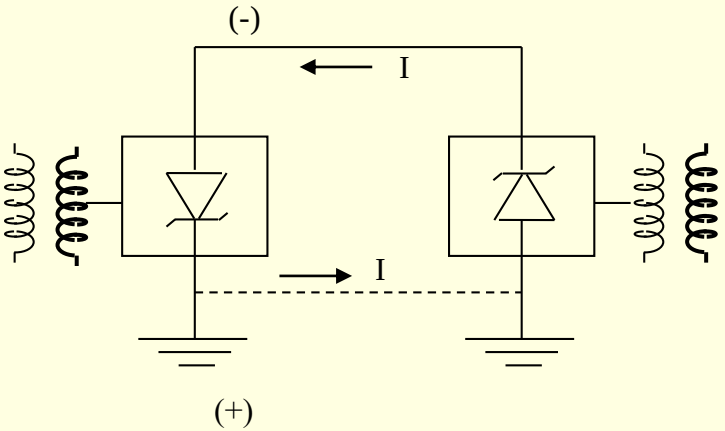

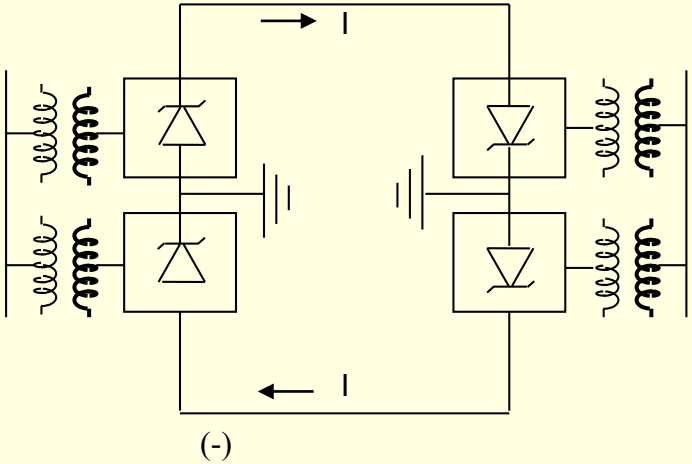

Continue

Each terminal has two sets of converter of identical ratings in series on the DC side. The junction between the two sets of Conductors is grounded at one or both ends.

(c) **Homopolar**: It has two or more conductors all having the same polarity (usually –ve) and also operated with ground or metallic return.

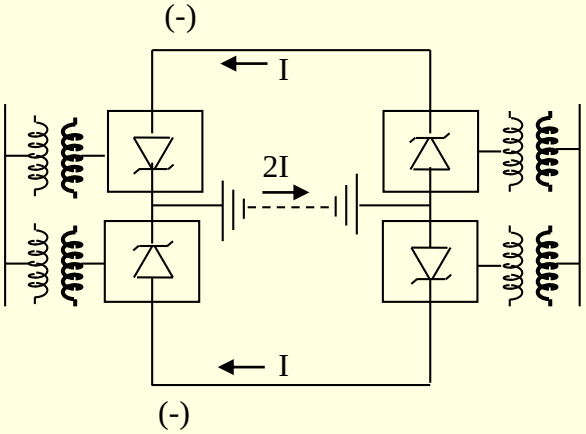

Converter Station

The major components of HVDC transmission systems are converter stations where conversions from AC to DC (Rectifier station) and from DC to AC (Inverter station) are performed.

Converter Transformer

The winding transformer can have different configuration:

a) 3-phase, 2-winding.

b) 1-phase, 3-winding.

c) 1-phase, 2-winding.

The converter transformers are designed to withstand DC voltage stresses and increased eddy current losses due to harmonic currents.

Filters

There are 3- types of filters used:

1. AC filters:

There are passive circuits used to provide low impedance. Shunt paths for AC harmonic currents. Both tuned and damped filter arrangements are used.

2. DC filter:

These are similar to AC filters and are used for the filtering of DC harmonics.

3. High frequency filters:

These are connected between the converter transformer and the station AC bus to suppress any high frequency currents. Sometimes such filers are provided on high- voltage DC bus connected between the DC filter and DC line and also on the neutral side.

Reactive Power Source

Converter stations require reactive power supply that is dependent on the active power loading. Part of this reactive power requirement is provided by AC filters. In addition, shunt capacitors, synchronous condensers and static VAR systems are used depending on the speed of control desired.

Choice of Voltage Level

For long distance bulk power transmission, the voltage level is chosen to minimize the total cost for a given power level (P).

The total costs include investment (c_1) and cost of losses (c_2).

The investment costs per unit length are

modeled as;

Continue

$C_1 = A_0 + A_1 nV + A_2 nq$

V: is the voltage level with respect to ground.

n: is the number of conductors.

q: is the total cross-section of each conductor.

A_0,A_1andA_2: are constants.

The cost of losses per unit length is given by;

$$C_2 = \left[n(P/nV)^2 \rho TLP \right] / q$$

p: conductor resistivity.

T: total operation time in a year.

L: loss load factor.

P: cost per unit energy.

Continue

C_2 can be simplified as; $C_2 = \left[A_3 (p/V)^2 p\right] / nq$

The total cost $C=C_1+C_2$

By minimizing the sum of C_2 and the 3rd term in C_1, we have,

$$nq = \sqrt{(A_3 / A_2)\, p}$$

A_3=T L P

Continue

Current density,

$$J = p/(nqV) = \sqrt{A_2/A_3}\, p$$

$$\therefore C = C_1 + C_2 + A_0 + A_1 nV + \sqrt[2]{A_2 A_3 p}\,\left(\frac{p}{V}\right)$$

High-Voltage DC Transmission Lines

Introduction

The facilities required for electric power supply comprise three groups: the generating stations, the transmission and interconnection of systems, and the distribution networks. With the increase in requirement of electric power, these facilities have to be increased. Considerations regarding the generation and distribution facilities to suit the requirements are not so difficult. Transmission and interconnection systems. However, have to be properly planned for this purpose. The voltage level of transmission system have increased in a short time from 110 kV to 220 kV and 400 kV

Continue

. Higher voltages such as 500 kV and 750 kV are also in operation. In the high range of voltages, it is worthwhile considering whether the three-phase voltage would solve the problems or high-voltage DC would be better.

With the development of mercury are converters handling large currents, and the associated high-voltage DC transmission technology, it has now been possible to use high-voltage DC transmission where large blocks of power are to be transmitted over a long distances. At both ends of a DC

Continue

transmission line, converting plants are used, one of them being operated as a rectifier, converting high-voltage AC to DC and at the receiving-end, the converting plant acts as an inverter changing high-voltage DC to AC. The generation as well as distribution is maintained at AC voltages as transformers facilitate to step up generation voltage to required high-voltage value and also step down to distribution voltage level at various consumers ends.

Limitations of High-Voltage AC Transmission

The factors, which impose limitation on the amount of power to be transmitted over a three-phase line, are:

1. Reactive Loss: An AC line with negligible resistance, inductance L and capacitance C will have lagging reactive VA loss and leading reactive. VA loss due to L and C of the line and the transmission would be economical if these two losses balance each other at all points along the line. This happens at the characteristic impedance of the line, Z_0 . The power transmitted, $VI=V^2/Z_0$. Watts per phase. However, it is not possible to operate the line at characteristic load conditions all the time. Thus, this causes reactive loss in the lines.

Continue

2. Stability: The power transmitted over a line of reactance X ohms per phase is

$$P = \frac{V_s V_r \sin\delta}{X}$$

watts per phase where V_s and V_r are sending and receiving-end voltages, respectively and δ is the load angle. The maximum steady-state power occurs when δ = 900 Considering transient conditions, δ is not generally more than 300 for effective stable operation of the system. Stability considerations impose serious limits on the distance of power transmission over ac lines.

Continue

3. Current Carrying Capacity Values of the current carrying capacities of overhead lines are above the corresponding natural loads (surge impedance loads) but with underground cables, the values are much below the natural-load values. The underground cables also have high-charging current. The charging current varies from 6 A per km for a 132 kV cable to 16 A per km for a 400 kV cable.

The length of the cable when charging current becomes equal to the thermal-cu Tent limit is known as critical length and limits the distance of power transmission by cables.

Continue

4.Ferranti Effect:

The rise of voltage at the receiving-end due to leading reactive VA on the line on no-load may be serious. This again limits the distance of transmission of power over AC lines.

Advantages of HVDC Transmission

1. In the case of DC lines, only two conductors are needed for a single line. Using earth return, only one conductor is enough and with two conductors and earth return, the capacity of the line is doubled, one of the conductors being at potential higher than the earth potential while the other is at potential below earth potential. With two-pole operation, the voltage of the line is also doubled. In the case of ac transmission line, at least three conductors would be necessary and for double-circuit line, six conductors would be necessary.

Continue

2. high-voltage DC line needs less space compared to an ac line of the same voltage rating and size. This reduces the space to be maintained.
3. The electrical field strength at the surface of the conductor can be about 50 % higher on overhead lines and about three times higher on cables in case of DC is compared to AC.

Due to nominal field strength and over voltages as well as due to lack of dielectric space charges and losses, dc cables are less expensive than ac cables.

Continue

4. For transmission rating of about 1000 MW to 2000 MW, costs were equal for a transmission distance of 500 to 1500 km in 1960. If the converter station costs are reduced by 30% to 40% as is expected, the transmission distance for equal cost would be reduced to even about 400 km for the use of high-voltage de transmission in preference to high-voltage ac transmission. In case of transmission by cables, this already applies for a distance of 100 to 200 km

Continue

5. There is no need to maintain the synchronism between the two ac systems connected together by a dc link The supply frequencies on the two sides may or may not be equal. The power flow along the HVDC line can always be maintained as long as the voltage of the systems linked by HVDC transmission is maintained within certain limits.

Continue

6. If transmission is interrupted due to a voltage drop in one of the systems, it is reestablished immediately after the voltage returns, irrespective of synchronism.

7. For AC voltages above 400 kV, it becomes necessary to limit the possible switching transients due to economic reasons. With HVDC such problems do not occur.

Continue

8. Power flow through a dc line terminal can easily be controlled via grid control of the valves. There being less inertia in a DC terminal due to the distance of rotating synchronous machines, the power control can be fast and accurate

9. HVDC does not transmit short-circuit power in case of faults and disturbances.

Continue

10. Terminals and lines can be built in stages. DC line voltages can be increased gradually by stepwise installation of an increased number of converters and the power capacity of the DC link will also be increased accordingly.
11. Feeding-in power in the medium-voltage part of the system using HVDC results in better utilization of the system and saving of circuit- breakers and transformers.

Continue

12. Two AC power systems having different frequencies can be linked up together by means of the HVDC link.

13. There is no technical limit to the distance over which power may be transmitted by overhead-transmission lines or by cable using HVDC.

Limitations of HVDC Transmission

1. The cost of terminal equipment is high. The voltage and the power to be transmitted should be high to justify the choice economically.
2. There is a possibility of considerable distortion in the waveform of the ac voltages by the use of HVDC link. Special filters will be necessary in the terminal equipment on either side of HVDC
3. DC line blocks the transmission of reactive kVA load. The receiving- end network must be capable of supplying the whole of the reactive component of power required by the loads and the inverters.
4. DC line is restricted to point-to-point transmission.

Principal Parts and Requirements of High-Voltage DC Transmission

Figure 4.3 shows a single-line diagram of a two-pole HVDC transmission line including the main features of the line this is the representation of HVDC line connecting the South and North island power systems in New Zealand.

Continue

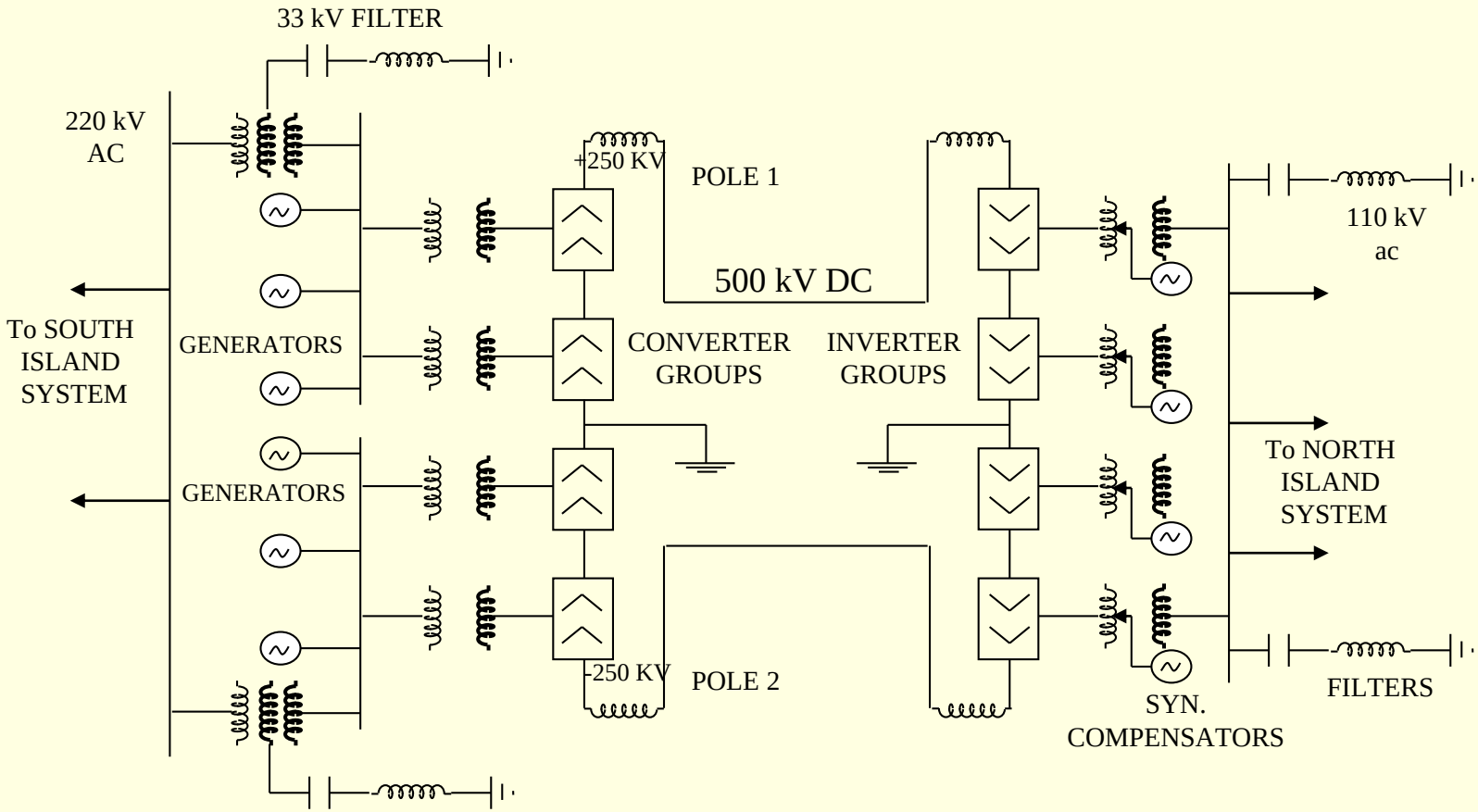

Fig. 4.3 Single-line diagram showing main connections of HVDC transmission

Continue

The main parts of the HVDC scheme are as follows:

1. Mercury Arc Converter Groups All HVDC transmission stations are present based on three-phase bridge converter circuits consisting of six mercury-arc excitation type valves plus a bypass valve.

Continue

2. Converter Transformers: The converter transformers have line winding, valve winding and tertiary winding between the two windings. The valve windings have to withstand direct voltages in addition to the normal ac voltage. The bridge circuit used gives three-phase two way-full-wave conversion-and, thus, six-pulse operation. For dc schemes, where there are two six-pulse converters per de pole, the two transformer windings on each pole are displaced by 30 so that the operation of both converters connected in series becomes a 12-pulse converter.

Continue

3. Smoothening Reactors: These reactors are used to smoothen the dc current output of a converter and to limit the rate of rise of the fault current in case of short-circuit on the dc lines. An air-cored magnetically shielded reactor is used for this purpose. The windings are of disc coil type and are braced to withstand short-circuit currents. Saturation inductance is not too low under short-circuit conditions. For these reactors, the inductance should be higher under light-load conditions to assist valve operation. This is made possible by providing a partial magnetic-core path in parallel with the air core of the reactor. The partial core becomes saturated when full load current passes through it.

Continue

4. Harmonic Filters: HVDC converter stations inject harmonic currents into ac systems and also draw reactive power from them. In the case of six-pulse Converter bridge, harmonic currents are of the order of (6n±1) where n is an integer. The harmonic filter is connected to the converter station terminals. The filter provides a low-impedance path to the earth for the harmonic currents. The use of filters prevents excessive quantities of harmonic currents and voltages from entering the system. The filter also supplies some of the reactive power consumed by the converter station.

Continue

5. Reactive power Requirements of ac Systems and AC/DC: Converters Mercury-arc valves are used in HVDC transmission schemes for converters. It is necessary to build up a forward voltage across the valve before firing it when it is in rectifier operation and it is necessary to ensure that it extinguishes before any forward voltage can occur across it when it is in inverter operation. As a result of this, there is phase displacement between the current drawn by the converter and the voltage of the AC system. Thus, reactive power is drawn from the AC system. The amount of reactive power required increases with the firing angle α of a rectifier and the extinction angle γ of an inverter. This power requirement is about 50% to 60% of the real power transfer. The reactive power consumption to some extent is provided by capacitors, filters or synchronous compensators associated with the converters.

Continue

A static device consisting effectively of a fixed capacitor in parallel with a transformer-fed AC saturable reactor will give virtually instantaneous control of MVAR for both supply and absorption. The synchronous compensators with their inherent inertia are also used in some cases. In Fig.4.3, synchronous compensators are used in station on 110 kV side after the inverter for this purpose. Synchronous compensators not only deliver lagging reactive power required by the load and converter but also provide ac voltage for the natural commutation of the inverter circuit.

Continue

The synchronous compensators used for HVDC systems would be laminated salient pole machines-even as 6-pole machines-due mainly to harmonic currents. The impedance of the machines to harmonics depends on subtransient reactance. The damper bar short circuit rings would be completed between the poles so that X_d'' is made approximately equal to X_q''. Damper bars help in reducing transients and harmonics

Principles of Control of HVDC Transmission

The current in a dc link depends mainly on the resistance and the difference in voltage at the two ends of the HVDC transmission line, according to Ohm's law. The voltage at the converter station depends on the number of converter groups in series, ac system voltage, converter tap-changer position, circuit impedances and firing angle of the valves. The tap-changer position and firing angle of the valves can be changed for control purposes. For efficient operation, the voltage is maintained high, For minimizing the reactive power consumption of the converters, the firing angle at the rectifier and the commutation margin angle at the inverter side are generally kept low. The inverter firing angle is controlled to maintain the commutation margin angle between 150 to 200,

Continue

and the inverter tap-changers controlled to give the rated dc voltage. The rectifier firing angle is then controlled to obtain the required transfer of current or power and the rectifier tap-changer is adjusted to keep the firing angle between 10° to 20° . If due to a sudden change in AC system voltage, it is not possible to increase the voltage above the requirement at the rectifier end, the voltage at the inverter end can be reduced by increasing the commutation margin angle at the receiving-end thus obtaining the necessary power transfer.

Continue

DC links have the ability to switch on or off all or varying amounts of power in a few milliseconds. This facility is used to protect dc equipment against, faults. In some cases DC converters are switched off for approximately 0.8 s and full load can be taken again in a few milliseconds. Thus, block-deblock sequence is possible with HVDC, transmission.

Applications of HVDC Systems

The application of HVDC transmission may be of the following types. In practice, combination of the types of application will exist:

1. Power transmission over long-overhead lines.
2. Power transmission through underground or submarine cables.
3. Interconnection of the individually controlled AC systems.
4. AC and DC lines in parallel.
5. DC transmission with AC distribution.
6. Frequency conversion.

Continue

The cost of a dc transmission line is less than that of an AC line while the cost of the terminal equipment in case of DC is highest In case of long-distance transmission lines, DC at high voltage becomes economical. The exact economy should be worked out for comparison under local conditions. However, in general, it may become economical for distances of over 500 km and voltage ranges of 400 kV and above.

The other advantages of HVDC transmission have already been discussed under 4.6.3. In general, a two-pole, two-circuit DC line costs about two-thirds of the single-circuit ac line carrying the same power and designed for the most economical voltage and current density in each case.

Continue

The cost per kilowatt of power transmitted is inversely proportional to square root of the kilowatt capacity of the line. Thus, high-capacity transmission lines are economical.

Power Transmission Over Long Overhead Lines: With the possibility of using HVDC transmission over long distances in comparison with AC as well as where it is not possible to transmit power over very long distances by AC, it is now possible to exploit large hydro-resources which may be very far from the load centers and transmit power by HVDC. Also, it is possible to develop thermal stations at coal pies at suitable economical sites and transmit power over long distances by use of HVDC transmission.

Continue

Power Transmission through Underground or Submarine Cables: For working out the economics of underground or submarine cables, the extra cost of the terminal equipment in case of HVDC should be paid for by the saving, in cable costs to justify the dc operation compared to AC operation. The difference in the cost of AC cables and DC cables is pronounced, as compared to overhead transmission. It is practicable and economical for distances of 50 km and more to go in for DC cable transmission.

DC cables are easier for construction and laying. Large submarine AC cables are oil-or gas-filled under pressure. DC cables can have simple paper insulation impregnated with a high viscosity compound.

Continue

Interconnection of Individually Controlled Systems: HVDC transmission is used for interconnecting two AC systems, even of different voltages. This becomes economical when there is diversity between the two systems either on the production side or on the consumption side. The interconnection also reduces the spinning capacity (reserve capacity) of the plan required in the systems. The interchange of power can be effected to or from either system required using the interconnection.

Continue

The interconnection has a small capacity compared to the capacity the systems interconnected. This

introduces difficulties in the stability and power control if interconnection is by means of an ac link. Instead of an ac link, if a DC link is used for interconnections an advantage is that the two AC systems remain independent in their voltage and frequency control.

As the system grows bigger and bigger, the short-circuit power increases more and more. Then the cost of switchgear is also high, and this often makes the desirable interconnection of power blocks uneconomical, when

Continue

using an AC link. A DC link does not increase the short circuit capacity of interconnected power systems. This is a great advantage in the use of DC link for interconnection. Only when it is necessary to introduce synchronous compensators for the control of reactive power with DC interconnection is there some addition of short-circuit capacity in the system.

Continue

The DC link has asynchronous nature and presents the possibility of running pump-storage stations with different speeds for pumping and generating operations of the plant. This would increase the efficiency of operation and this could also obtain without any switching in the main circuits.

AC and DC Lines in Parallel: It is possible to transmit a part of the power by interconnection with a DC link while the rest of the power is transmitted over an ac line. High voltage ac line an HVDC line can be used in parallel as an AC-DC system. The dc link can be used with advantage for control of power. Figure 4.4 shows a simple arrangement

Continue

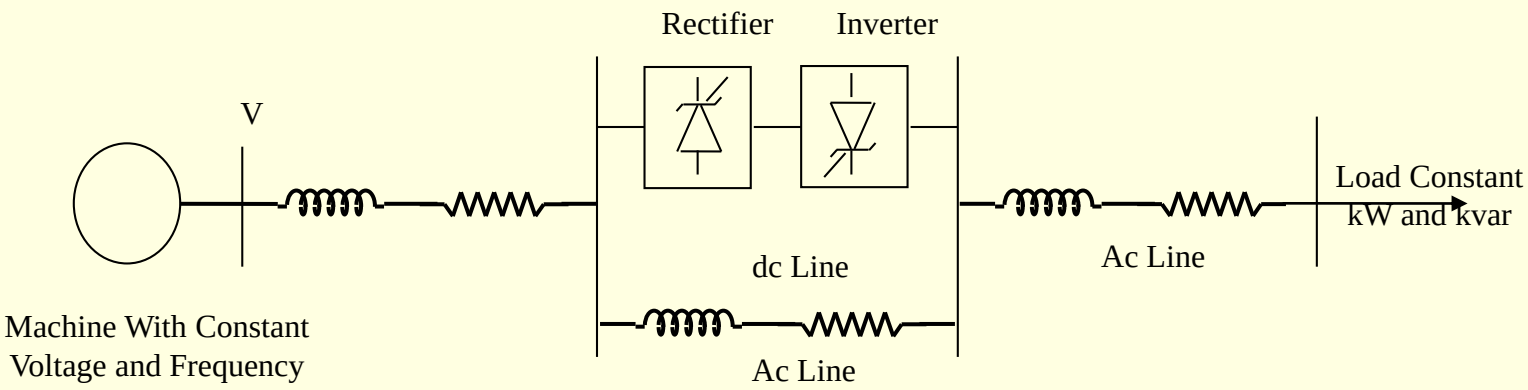

Fig.(4.4) Simple parallel AC-DC system

With Our Best Wishes

Transmission and Distribution of Electrical Power

Course Staff

Associate Prof. Dr . Mohamed Ahmed Ebrahim